ABS submersible sludge pump JS 84

Specification
Electric submersible pump.
Maximum submergence: 20 m. • Protection class IP 68.
Max temperature of pumped medium at max power input and continuous duty 40ºC.
Max medium density 1100 kg/m³. • pH of the pumped medium 5-8.
Strainer with free passage 55x45 mm. • Max no. of starts 30/hour.
Max impeller diameter requires half motor or more submersed for continuous duty. (Pump can operate lying down.)

JS 84 D/DKS*-175 3-phase.**
JS 84 D/DKS*-196 3-phase.

*option: built in float switch, excl. 500V
**Impeller diameter for duty with low water level or intermitent dry running.

Electric Motor
3-phase squirrel-cage induction motor, 50 Hz.
Service factor 1.1. Class F insulation.
Motor rating P_2: 8.0 kW. Speed: 2850 rpm

Voltage, V	230	400	500
Nominal current, A	27.8	16	12.2

Starting Method
D.O.L. start with built-in contactor.
D.O.L. start with built-in SoftDrive (400-460V).
When used with VFD, pump must be equipped with terminal block instead of contactor.

Power Cable
20 m type S1BN8-F (standard cable):
4 x 4 sq.mm. (230-400 V)
4 x 2.5 sq.mm. (500 V)

20m NSSHÖU.../3E (heavy duty cable):
3x2.5+3x2.5/3E (230-500V)

Motor Protection
Built-in thermal switches in the stator windings (140ºC, ±5), connected to built-in contactor.

Shaft Seal
Double mechanical seal in oil bath.
Primary seal: Silicon carbide on silicon carbide.
Secondary seal: Stainless steel on antimony treated carbon.

Bearings
Upper bearing: Single-row deep groove ball bearing.
Lower bearing: Double angular contact ball bearing.

GB 50 Hz

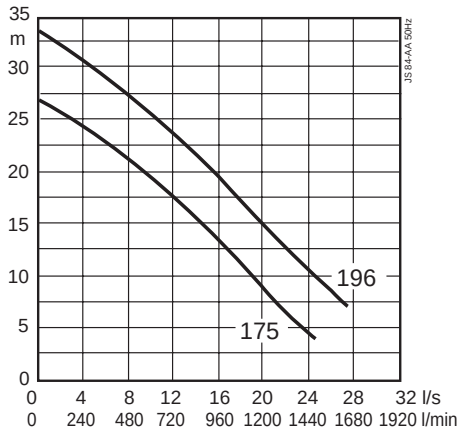

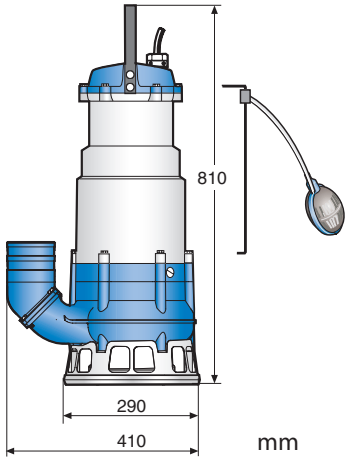

Discharge Connections
3", 4" (standard) hose connections.
3", 4" B.S.P. threaded connections.

Weight (without cable)
67 kg

Options and Accessories
Zinc anodes • Surface protection coating
Electronic motor supervision • Starter and control units
Automatic level control unit • Floatation system • Repair kit
Discharge connection accessories and hose

Materials		**EN**	**ASTM**
Motor housing	Aluminium	EN 1706: AC-43100	ASTM AlSi10mg
Handle and fasteners	Stainless steel	10088:X5CrNi18-10 (1.4301)	AISI 304
Rotor shaft	Stainless steel	10088:X20Cr13 (1.4021)	AISI 420
Volute and impeller	Nodular cast iron	1563:ENGJS-HB150	ASTM A 536-80: 60-40-18
O-rings	Nitrile rubber		

SULZER

abs

ABS submersible sludge pump JS 84 2013-04-26 | We reserve the rights to alter specifications due to technical developments.